5806 Pleven, Bulgaria
58, Kliment Ohridski Str.
Web: www.dmtech-ltd.com
E-mail: office@dmtech-ltd.com


# Instruction manual
# CONVENTIONAL SOUNDER
# S9000



## 1. INTRODUCTION

S9000 is applicable for sound and flash LED indication of events registered in Fire Alarm Systems. S9000 is compliant with EN54-3. The sounder is connected with a two-wire cable to a base B9000. After being mounted on its base, the sounder must be locked.

## 2. TECHNICAL DATA

- Power supply: 9-30V DC
- Alarm state current: max. 60 mA/24V DC
- Sound level, type “Slow whoop” on 1m: 96 dB/24V DC
- Frequency, pattern “Slow whoop”: 0.5 – 1.2 kHz
- Flash light signalling: red
- Connection to fire detector: two-wire line
- Degree of protection: IP 40
- Operational temperature range: -15°C up to 70°C
- Relative humidity resistance: (93±3)% at 40°C
- Dimensions: Ø100 mm / h≤52 mm
- Weight: 0.100g

## 3. MOUNTING THE SOUNDER

- Choose the place (according to the plans of the project) for the installation of the sounder;
- Mount the base with appropriate fixings;
- Connect the electrical cables according to the attached diagram (Figure 1);

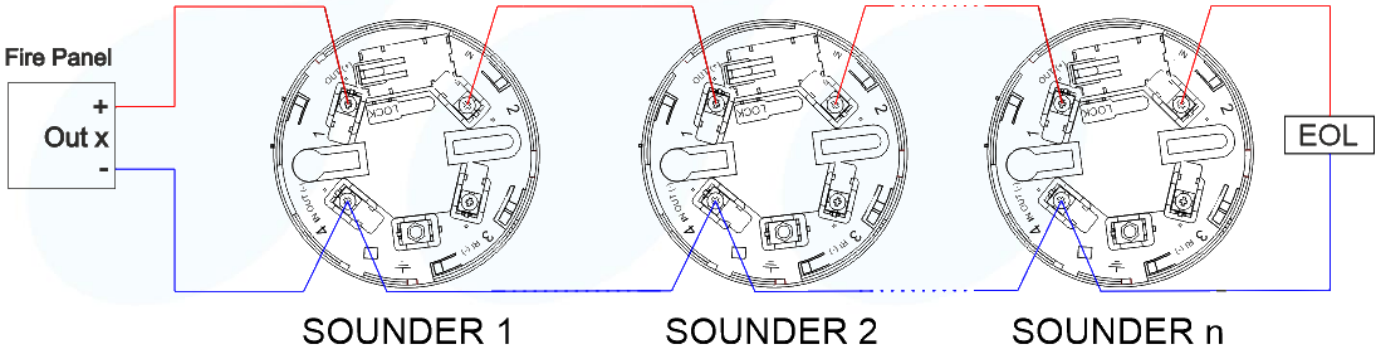


Fig. 1 – When connected to a controllable output of Fire panel

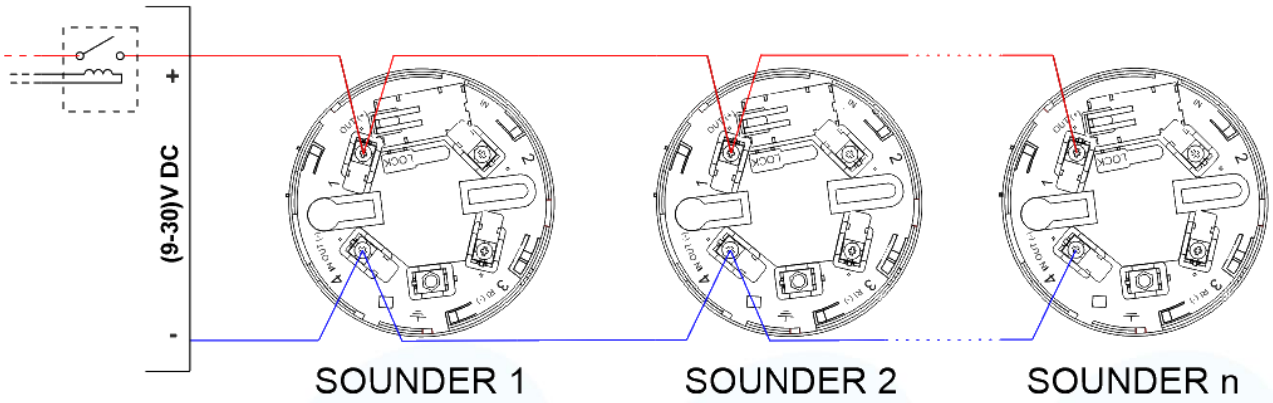


Fig.2

- Place the detector base and rotate clockwise till matching markers;
- Lock of the of the sounder:
  - Pre-remove the key from the base (Figure 3).
  - Break the plastic at the specified location on the bottom of the sounder (Figure 4).

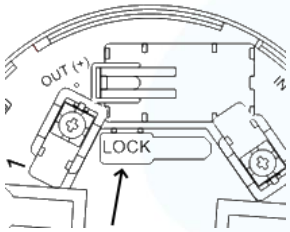


Fig.3

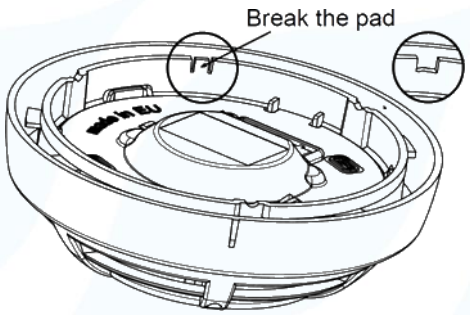


Fig.4

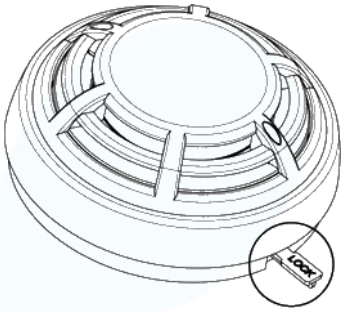


Fig.5

  - Place the sounder base and rotate it.
- If the sounder is locked to the base, to unlock it, insert first the key to the specified location (Fig. 5) and rotate the sounder counterclockwise;

## 4. WARRANTY

The warranty period is 36 months from the date of sale, provided that:

- storage and transport conditions are met;
- the commissioning is carried out by authorized persons;
- the operating requirements set out in this manual are observed.
- the defects are not caused by natural phenomena and failures of the power supply network.

If a warranty repair is required, contact your supplier.

1922 – CPR - 1804

*DMTech wishes you pleasant work!*